Regd. Office & Factory 34-B MIDC Industrial Estate, Satpur, Nashik 422 007, India.
Phone 0253 2350533 • 0253 2350237 Fax 0253 2351682
e-mail mail@alconelectronics.com • website www.alconelectronics.com

ALCON ELECTRONICS PRIVATE LIMITED

Capacitor specifications	**DCL-30/31 Metallized Polypropylene Film Capacitors**
Application	**General use in Power Electronics also for nonsinusoidal voltages and currents**
Reference Standard	**IEC 61071:2007**
Design Ref. no.* **	DCL-30-041 Rev 00 *** To be mentioned during ordering
Description	**320 uF ±5% 1350Vdc 85 x 185**

Date 12.07.2013

Customer : IGBT Electronics

Construction

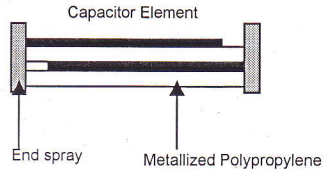

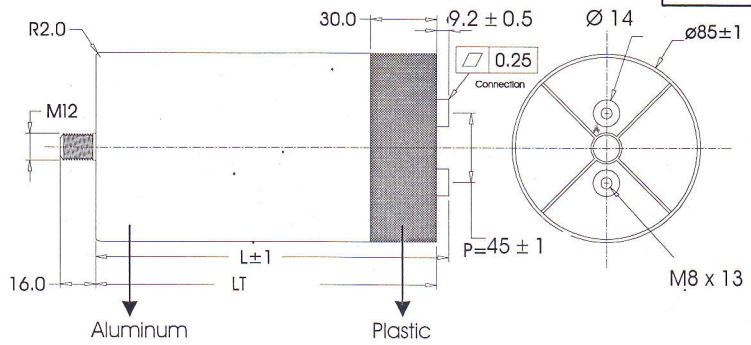

D ± 1	85.0
L ± 1	194.2
P ± 1	45.0
LT ±1.5	185.0

Mechanical Characteristics

Enclosure	Aluminum can ,plastic top cover UL94V0
Terminations	M8 x13mm deep female
Internal Protection	No internal fuse
Encapsulation	Non liquid , No PCB , filled with PU resin
Weight	1.3 KG

Reliability

Failure Rate	300FIT
Reference Life @ $\Theta_{hotspot}$	100,000hrs @ ≤ Θ60˚C

Thermal Conditions

Operating temp	-40˚C to +70˚C at 1350 Vdc
	-40˚C to +85˚C at 945 Vdc
Maximum hotspot temp	-40˚C to +100˚C at 675 Vdc
Temperature Coeff.	-2.3% from -20˚C to +70˚C

Electrical Characteristics

Rated Capacitance	C_N	320 µF
Capacitance Tolerance		**± 5%**
Rated voltage d.c.	U_{NDC}	1350V
Ripple voltage Max.	Ur	325V
Non-recurrent surge voltage	u_s	1950V
Maximum peak current	I_{pk}	2500 A
Maximum current (rms)*	Imax	100A
Effective Series resistance	R_s@ 10Khz	2.8mΩ
Tangent of loss angle	Tanδ	0.005@ 10Khz
Self inductance	Ls	40nH

Routine Test

Voltage test between terminals 10 secs	U_{TT}	2000Vdc
Voltage test between terminals to case 2 secs	U_{TC}	4000 Vac / 50 Hz

* @50ºC for short time

Humidity	Class F :Max. relative humidity 75% annual means , 85% occasional ,95% 30 days /year , condensation not permitted
Mounting	Any position without restrictions
Earthing	Mounting stud to be earthed

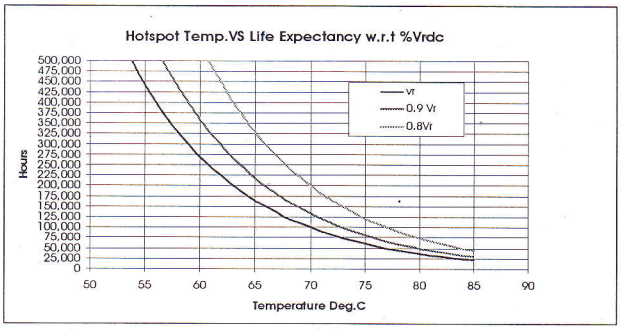

Prepared by **Checked by** **Approved by**

MASTER COPY

ISO 14001 : 2004 Reg No. : RE91 / 6173